n (No. of pos.)	A	B	C	D	E	F	
	Dimensions						
50	34.4	28.8	23.2	0.8x24=19.2	19.6	24.9	1
26	24.8	19.2	13.6	0.8x12=9.6	10	15.3	
14	20	14.4	8.8	0.8x6=4.8	5.2	10.5	

	Lock type	Panel tickness	Note
	W/O lock screws	——	——
-SLD	Screw lock	——	——
-SLE	Spring lock	——	——
5 -SLF	Screw (panel mount)	0.89	Note.#4
-SLG	Screw (panel mount)	1.12	Note.#4
2 -SLH	Spring (panel mount)	1.2	Note.#4
3 -SLM	Screw (panel mount)	0.8	Note.#4

HDR-EC( )LFDTG2( )+
Lock type
No. of pos.

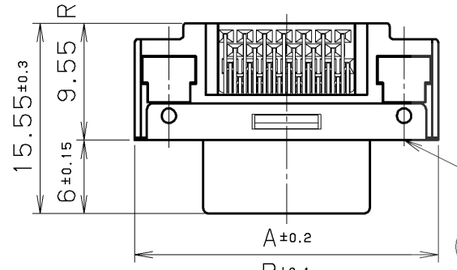

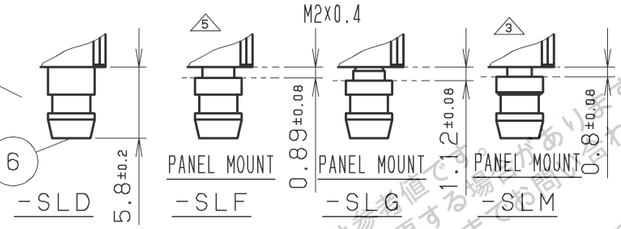

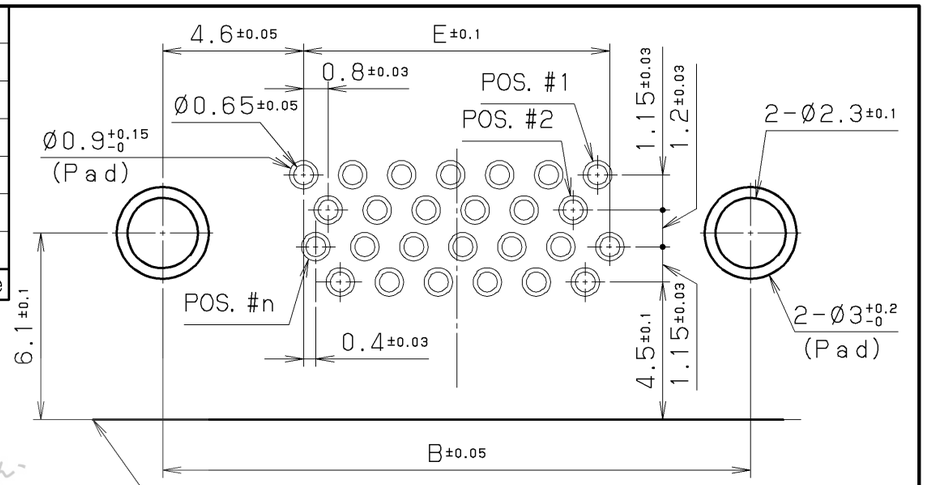

RECOMMENDED P.C.B. LAYOUT
(MOUNT SIDE VIEW)
(t=1.6 SCALE=5/1)

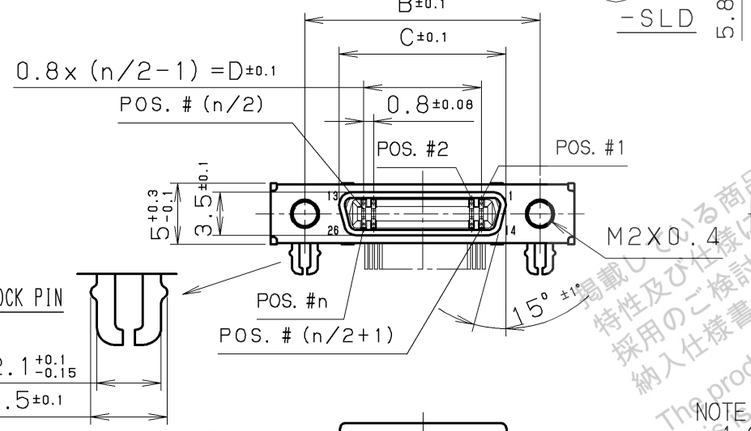

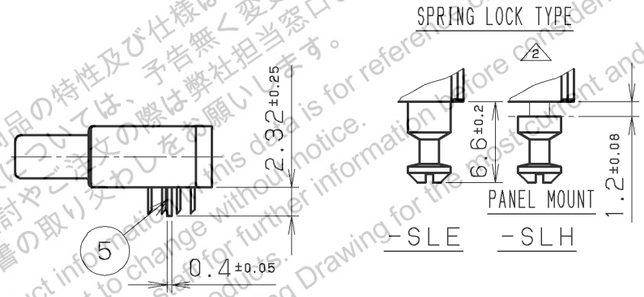

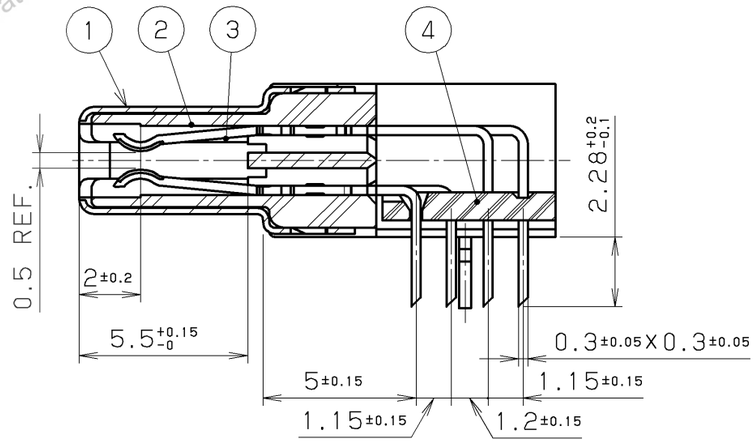

CONTACT DETAIL

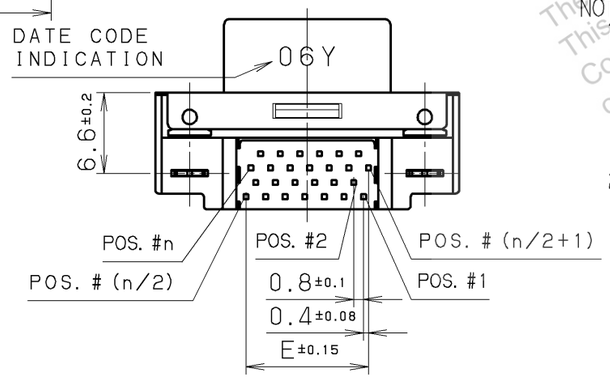

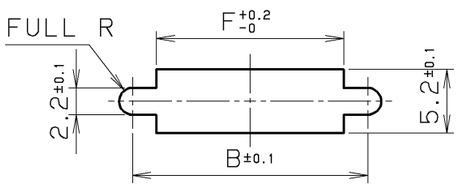

RECOMMENDED
PANEL CUT-OUT DIMENSIONS

NOTE
1. CONTACT PLATING
MATING AREA :0.76 MICRO METERS MINIMUM GOLD PLATING
TERMINATION AREA :0.05 MICRO METERS GOLD PLATING
UNDERPLATING :NICKEL PLATING
2. MATING CONNECTOR
HDR-E( )MAG1+
HDR-E( )MSG1+
3. SPECIFICATION
RATED CURRENT 0.5A
RATED VOLTAGE 125V AC(r.m.s.)
4. TWO LOCK SCREWS ARE SUPPLIED WITH A CONNECTOR.

掲載している商品の特性及び仕様は参考値であり、
特性及び仕様については、予告無く変更する場合があります。
採用のご検討やご注文の際は弊社担当窓口までご確認願います。
納入仕様書の取り交わしをお願いします。
The product information in this data is for reference only.
This is subject to change without notice.
Contact our sales staff for further information before considering or
ordering any of our products.
Please request Engineering Drawing for the most current and accurat
design information.

LTR.	DATE	BY	REV. DESCRIPT	No.	PART NAME	MATERIAL	QTY	FINISH	NOTE
				6	LOCK SCREW	STEEL	2	NICKEL PLATING	——
5	Jan-26 2018	S. M	Add P/N	5	BOARD LOCK PIN	PHOSPHOR BRONZE	2	TIN PLATING	——
4	Jul-11 2012	M. K	Add P/N	4	BRACKET	PPS (GF)	1	——	UL94V-0 BLACK
3	May-18 2011	Y. K	Revise (Tolerance)	3	FEMALE CONTACT	PHOSPHOR BRONZE	n	NOTE. #1	——
2	Nov 20 2009	K. E	Add P/N	2	INSULATOR	PA9T (GF)	1	——	UL94V-0 BLACK
1	Nov-29 2007	Y. K	Add 50 pos.	1	SHELL	STEEL	1	NICKEL PLATING	——

DATE	SCALE	UNIT	3RD. A. P
Nov.21, 2006	2 / 1	mm (INCH)	

APP. DATE&REV.

DR.	DE.	CHK.	CHK.	APP.
S. MURAKAMI	S. MURAKAMI	S. YOSHIDA	——	K. OOAKU

HTK HONDA TSUSHIN KOGYO CO., LTD.

NAME	0.8mm SPACING RIGHTANGLE FEMALE CONNECTOR	
PART NO.	HDR-EC( )LFDTG2-( )+	REV. 5E

ID= HDR-EC@LFDTG2-@+ EE